FLUCOM ITALY

MOTION CONTROL THREE WAY WITH PILOT

REVERSE FREE FLOW CHECK

CMQ 50

07.070

01.96

Technical features

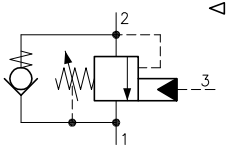

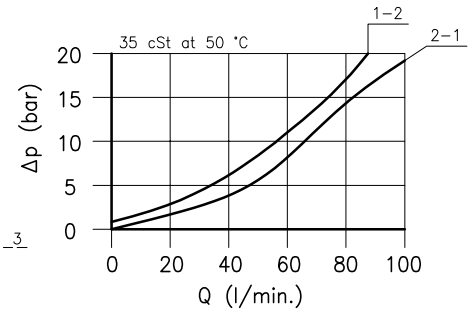

$$PP = \frac{(SP + BP) - LP}{8}$$

PP = Pilot pressure
SP = Setting pressure
BP = Backpressure port 1
LP = Load induced pressure

Cavity (For dimensions see catalogue 17.000)		S 50/3
Max. flow	(l/min.)	90
Max. system pressure	(bar)	315
Max. setting pressure	(bar)	420
Pilot ratio		8:1
Fluid viscosity range	(cSt)	2.8 – 380
Fluid temperature range	(°C)	–20 +80
Mass	(kg)	0.520
Cracking pressure 95% of setting value		
Reseat pressure 75% of setting value		
Standard setting obtained with 1 l/min.		
Hydraulic fluid; mineral oil HM and HV ISO 6074		
Recommended filtration; 19/15 ISO 4466 (25 μ absolutes)		
Standard seals in Polyurethane and Buna N		

Dimensions

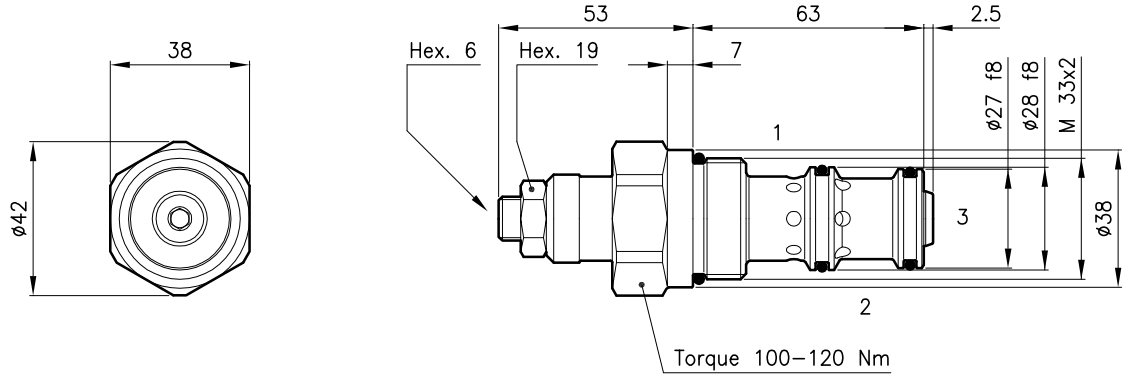

Ordering informations

CMQ 50/T–L

CMQ 50 = Valve type

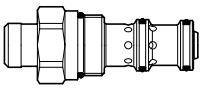

Standard springs

Type		Setting range	Factory set
D	=	25 – 125 bar	105 bar
T	=	105 – 420 bar	280 bar

Adjustment type

L = Adjustment with overset protection

Codes:

CMQ 50/D–L	54 011 100
CMQ 50/T–L	54 011 101
External seals kit	90 620 107

CMQ 50 valves can be assembled on standard bodies 50–C3 series; for dimensions see catalogue 16.010

07_070